User Manual
HK-M 3.3KW on Board Battery Charger

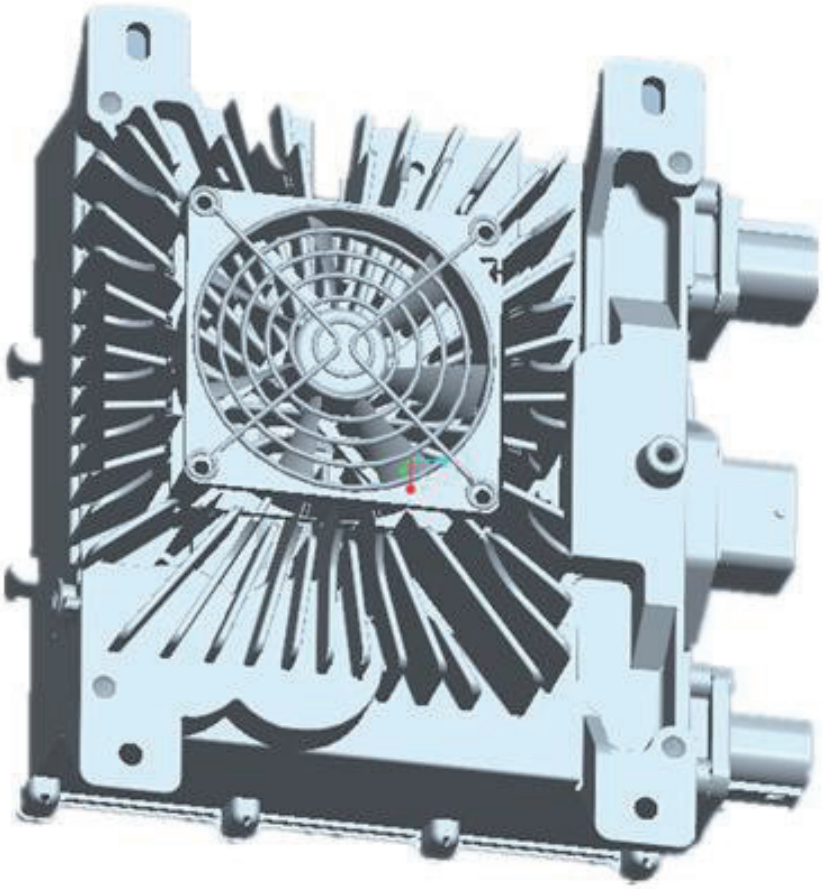

Enforced Air Cooling

1. Overview

HK-M series 3.3KW charger was specially designed by Tiecheng Information Co., Ltd for supplying the electricity for electric vehicle's power battery on the basis of the China standards for the charger. This product not only has the advantages of high efficiency, small size, high stability, long lifespan, but also high protection grade, high reliability as well as complete protection function, etc. It's definitely an ideal charging power supply for electric vehicles.

This charger has been configured with the heat-sensing device internally, which can be automatic recovered through the thermal protection. Fully sealed potting process with the protection grade of IP67 ensure no causing trouble in any complicated environment.

Main Feature:

Support UDS diagnostic, with CAN wake-up function

Fully Sealed craftwork, reliable working between -40℃ and +85℃

Internal thermal sensor, shut off when internal temperature over 90°C

IP67 Protection Grade, working well in immersion shortly

2. Model Definition

Model	Cooling Method	Voltage Platform	Hardware	Power
HK-MF-48-40	Enforced Air Cooling	48V	48V/40A	2KW
HK-MF-72-40	Enforced Air Cooling	72V	72V/40A	3.3KW
HK-MF-108-32	Enforced Air Cooling	108V	108V/32A	3.3KW
HK-MF-144-23	Enforced Air Cooling	144V	144V/23A	3.3KW
HK-MF-312-10	Enforced Air Cooling	312V	312V/10A	3.3KW

3. Label Definition

- Model: please refer to the Model definition. HK-M
- Configuration: CAN Protocol Number
- OBC Output range: Please refer to the below table: “OBC Technical Specification”

4. Technical Specification

Voltage Platform		**48V**	**72V**	**108V**	**144V**	**312V**	**540V**
Output	Output Voltage Range	18-68V	25-99V	45~177V	50~202V	110~450V	170~680V
	Output Current	40A	40A	32A	23A	10A	7A
	Output Power	3300W@220VAC 1600W@110VAC					
	Mode	CV / CC					
	CV Accuracy	±1%					
	CC Accuracy	±2%					
	Ripple Voltage Coefficient	5%					

Input	Input Voltage Range	AC 90~265V
	Frequency	45-65Hz
	Input Current	16A
	Power Factor	≥0.99 Over half loading
	Efficiency	≥93% Full loading

	Standby Power Consumption	≤5W

Low Voltage Output	Mode	CV
	Output Voltage	13.8V
	Rated Current	5A
	CV Accuracy	±2%
	Output Power	≥62.5W
	Ripple Voltage Coefficient	1%

Protection	Input Over-voltage Protection	AC270±5V
	Input Under-voltage Protection	AC85±5V
	Output Over-voltage Protection	Stop the output when it exceeds 1% of the maximum output voltage
	Output Under-voltage Protection	Stop the output when it declines 5% of the minimum output voltage
	Output Over-current Protection	Stop the output when it exceeds 5% of the maximum output current
	Over-temperature Protection	Power derate from 85 ℃ and shut off at 90℃(OBC Internal Temp.)
	Short-circuit	Stop output
	Battery Reverse Connection Protection	Yes
	Ground Protection	≤100mΩ
	CAN Communication Protection	Stop output once CAN communication invalid
	Power off Protection	Yes

Signal Interface	CC Signal Detection	100Ω－3.3k- infinity
	CP Signal Detection	0%－100%, 5V－15V Vpp
	CC Signal Output	220Ω or 680Ω
	Temperature Detection	Two Sensor input, 1K and 10K supported
	12V Wake-up Signal Input	≤ 10mA
	12V Wake-up Signal Output	Maximum 0.2A
	12V Constant Voltage	Standby current ≤1mA; Peak Current ≤5A
	Electromagnetic Lock Drive	Maximum Peak Current 5A

	Electromagnetic in Place Signal	Switch Value
	CAN Communication	Yes
	Baud Rate	125Kbps、250Kbps、500Kbps(Optional)
	Terminal Resistance	No

Safety and Others	Hi-Pot Testing	Input to Output: 2500VAC≤10mA Input to Ground: 2000VAC≤10mA Output to Ground: 2000VAC≤10mA, all 1min
	Ground Resistance	Resistance less than 100mΩ between ground and radiator, testing current 25A AC
	Insulation Resistance	Input, output to shell ≥10MΩ，testing voltage 1000VDC
	Electromagnetic Immunity	GB/T 18487.3-2001 11.3.1
	Electromagnetic Abusive	GB/T 18487.3-2001 11.3.2
	Harmonic Current	GB 17625.1-2003 6.7.1.1
	Inrush Starting Current	≤24A
	Current Rise Time	≤5S，overshoot≤5%
	Close Response Time	100% to 10%≤50mS，100% to 0%≤200mS
	Protection Class	IP67
	Anti-Vibration	10-25Hz Amplitude1.2mm, 25-500Hz 30m/s2, 8hrs per direction
	Noise	≤60Db (class A)
	MTBF	150000H
	Working Environment	Relative Temp 5%-95%, No condensation
	Wording Temperature	-40 ~ 65℃
	Storage Temperature	－55℃ ~ ＋85℃
	Over-temperature Protection	Stop working when internal module temperature is increased to 90℃， resume working automatically after cooled

5. Interface Definition

Interface Definition 1：（48V, 72V,108V）

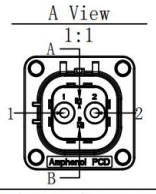

HVSL362022A(SP01B022A)OBC Output Terminal Crimping(Big):C3100235011(SP01N45001P) Crimping(Small):C310003614(SP01N12001S)			
Brand	Pin	Definition	Wiring Color /Diameter (mm²)
Amphenol	1	Positive	Red/8AWG
	2	Negative	Black/8AWG
	A	HVIL Signal 1	Grey/0.5mm²
	B	HVIL Signal 2	Brown/0.5mm²

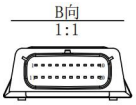

348302001 Signal Terminal			
Brand	Pin	Definition	Color/Wiring Diameter (mm²)
Molex	10	12V5A Output +	/
	11	CANH	
	12	CANL	
	13	HVIL 1	
	14	HVIL 2	
	17	GND	
	Others	NC	

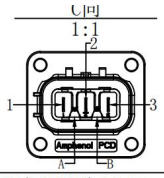

HVSL633023A(SP01A023A) OBC Input Terminal Crimping (Big):C310003622(SP01N63001P) Crimping(Small):C310003614(SP01N12001S)			
Brand	Pin	Definition	Wiring Color /Diameter (mm²)
Amphenol	1	Null Line (N)	Black/4
	2	Earth Line (PE)	Yellow Green/4
	3	Live Line (L)	RED/4
	A	HVIL Signal 1	Grey/0.5
	B	HVIL Signal 2	Brown/0.5

Mating Connectors (For Reference)			
Terminal	Mating Connector	Crimping	Accessories
OBC Input	HVSL633063A104I (SP01A063A104I)	C310003623 (SP01N63001S)	Included
OBC Output	HVSL362062A110I (SP01B062A110I)	C3100235021 (SP01N45001S)	Included
OBC Signal	334722006	330122002	Rest (Included) 343450001 (Selas)

Interface Definition 2：(144V, 312V, 540V)

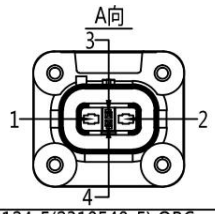

2103124-5(2310540-5) OBC output			
Brand	Pin	Definition	Color/Dia. (mm²)
TE	1	Positive+	Red/2.5
	2	Negative-	Black/2.5
	3、4	HVIL	Black/0.5

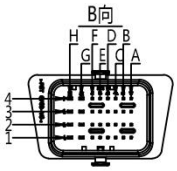

0643340100 OBC Signal Connector			
Brand	Pin	Definition	Mark
Molex	2H	12V5A	LV output
	4A	CAH_H	
	4B	CAN_L	
	4G	GND	
	rest	NC	

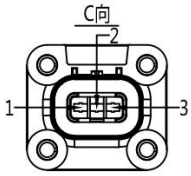

2103247-1 OBC Input			
Brand	Pin	Definition	Color/Dia. (mm²
TE	1	Line (L)	Brown/2.5
	2	Earth (PE)	Yellow Green/2.
	3	Null (N)	Blue/2.5

6. Schematic Diagram

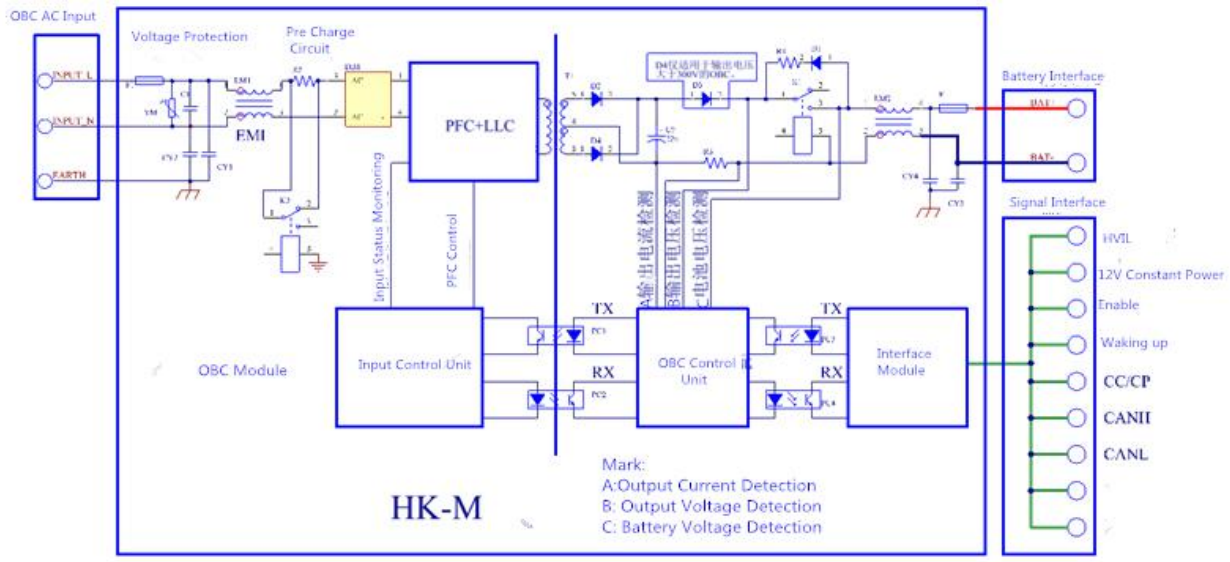

7. Data Chart

Efficency Curve – OBC

3.3kw_144V Efficiency Curve:

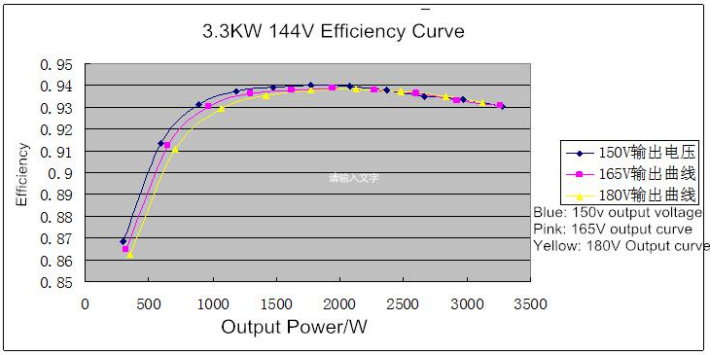

3.3KW_312V Efficiency Curve:

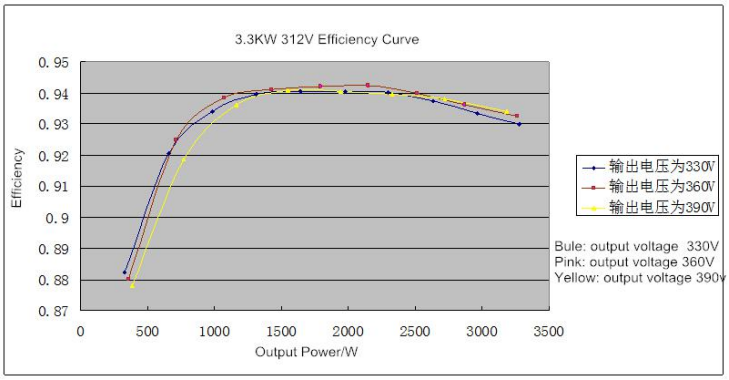

8. Power Density

	Weight	Volume	KG Unit	Volume

			Density	Density
Unit	kg	L	kw/kg	kw/l
Enforced Air-cooling	7	12	0.5	0.3

9. Installation Size (Net Weight: 4.6 KG)

Installation Size 1 - Enforced Air-cooling:(48V,72V,108V)

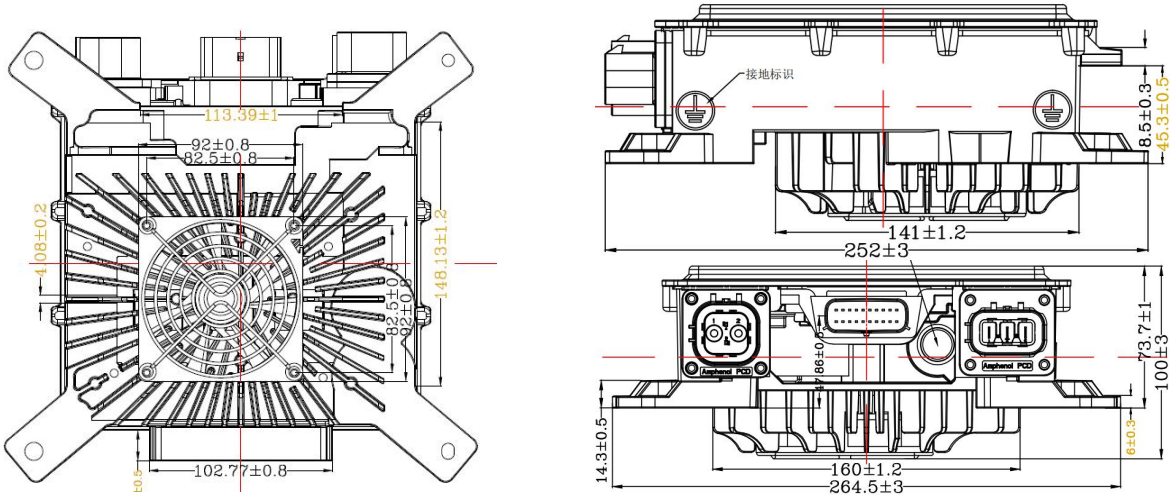

Installation Size 2 - Enforced Air-cooling:(144V,312V)

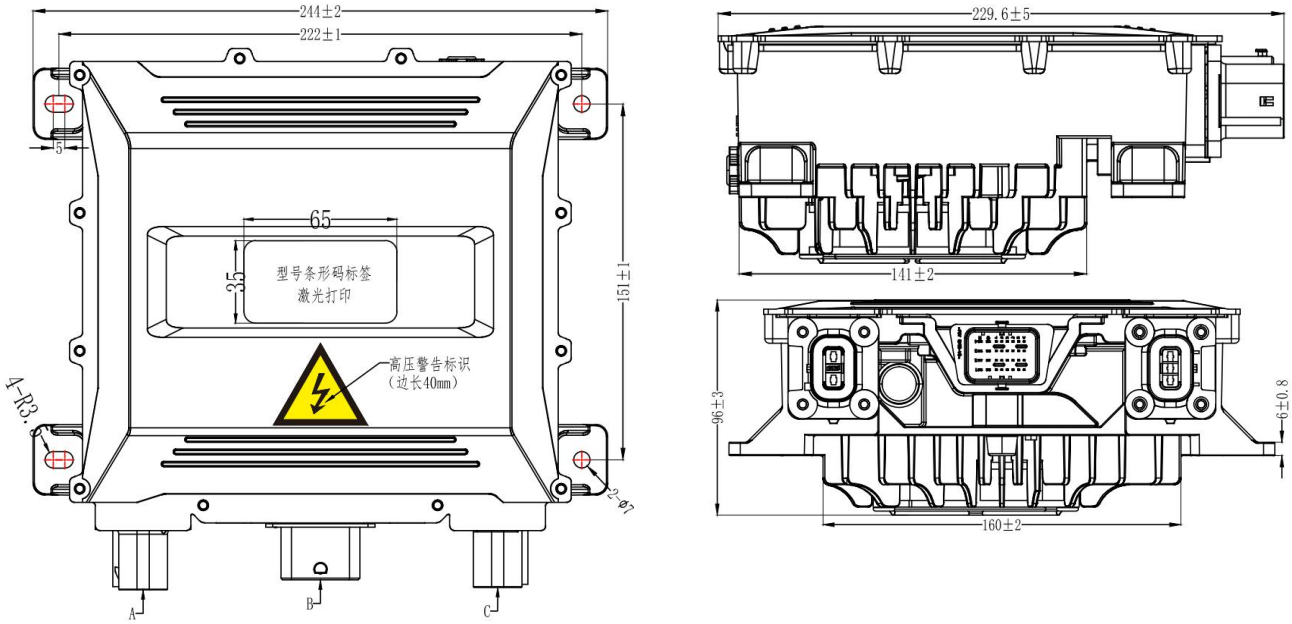

10.

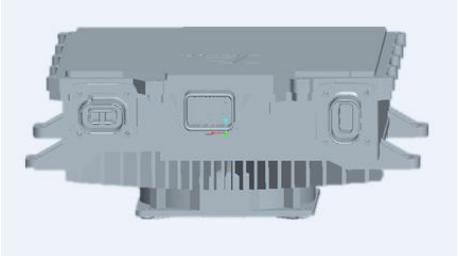

Well Accepted

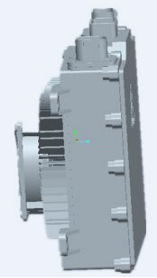

Accepted

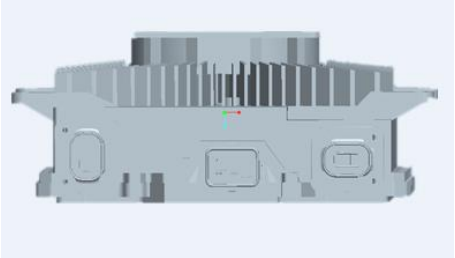

Not Accepted